PRACTICAL ACTION
Technology challenging poverty

technical brief

HUMAN-POWERED WATER-LIFTERS

The choice of water lifters available is large and varied, making the selection of an appropriate device difficult. In America and Europe during the 19th century the design of mass-produced hand pumps evolved by trial and error rather than through scientific research and development. There are now a large number of adequate, rather than optimum, designs conceived by local manufacturers, and it is hard to know which pump is the best for each application. This brief presents an overview of the types of human-powered water-lifters available, the applications appropriate to them and their comparative advantages.

Water-lifters can be broken down into the following categories:

- Groundwater (open-well, shallow-well and deep-well pumps)
- Surface Water (shadouf, dhone, chain and washer and Archimedean screw)

Groundwater
When rain falls, it seeps into the ground and collects in an underground reservoir known as groundwater. The upper limit of this reservoir, the "water-table", may vary in depth, from just below the surface (like in a spring or oasis) to well over 100 metres. The only way to get at this water is to dig down.

Open-well
The simplest and cheapest method of lifting groundwater remains the rope and bucket in a wide, shallow well. These can operate to a depth of 100 metres, although they rarely exceed 45 metres, and can last for a very long time without maintenance. It is worth considering this design before proceeding with more complicated methods.

It may not be possible to construct an open-well if the water table is too deep or if the foundations are very hard (such as rock) or very soft (such as fine running sands). These restrictions also depend on the method of construction.

If the groundwater can only be accessed through a bore, then a groundwater *pump* must be used. Groundwater pumps can be split into two categories, shallow-well and deep-well.

Shallow-well pumps
Most types of groundwater pump have a piston that moves back and forth inside a two-valve cylinder (a valve allows water to pass in only one direction - in this case, upwards):

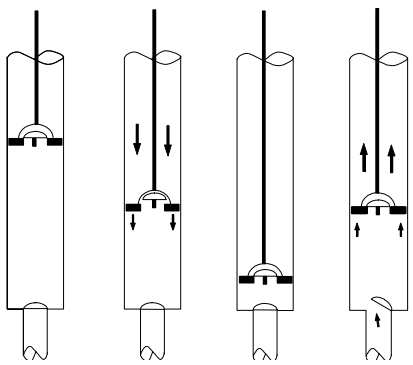

Figure 1: How most types of pump cylinders work

Suction pumps have the cylinder situated above ground or near the surface. This means that they can only be used for shallow wells. It is called a suction pump because pulling up on the piston creates a low pressure ("suction") in the cylinder, causing the atmospheric pressure outside to push the water up to the surface. Because atmospheric

Practical Action, The Schumacher Centre for Technology & Development
Bourton Hall, Bourton-on-Dunsmore, Rugby, Warwickshire CV23 9QZ, UK
Tel: +44 (0)1926 634400 Fax: +44 (0)1926 634401 E-mail: infoserv@practicalaction.org.uk Web: www.practicalaction.org
Intermediate Technology Development Group Ltd Patron HRH - The Prince of Wales, KG, KT, GCB
Company Reg. No 871954, England Reg. Charity No 247257 VAT No 241 5154 92

pressure is fairly low, the pressure difference between inside and outside the cylinder is only large enough to raise water from a maximum depth of about 7 metres.

It should also be noted that if a shallow-well is used too much, the water-table may fall as the underground reservoir of water is reduced. If this level falls below 7 metres, the pump will not work.

Four types of shallow-well pumps are shown below: rower, piston, diaphragm and semi-rotary.

Rower

The rower pump is a simpler and cheaper version of the traditional piston pump (see below). Its simple design means it can be easily manufactured and maintained using locally available skills and materials. This type of pump may require "priming", which means pouring water into the cylinder so that the seal around the piston is airtight. It is very important that clean water is used, to avoid contamination of the pump and the spread of water-borne diseases.

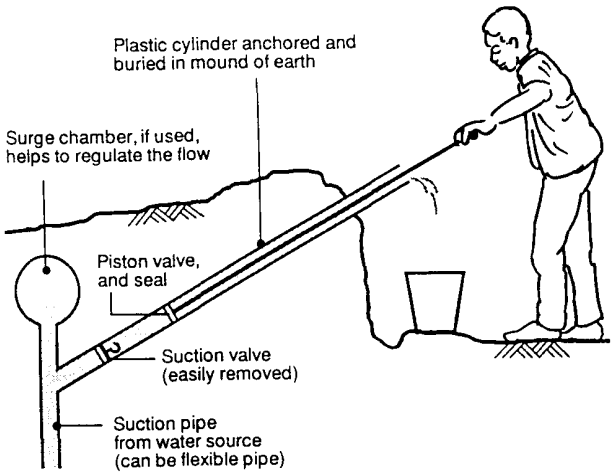

Figure 2: Rower pump

Piston

Piston pumps, based on the same design as shown in Figure 1, are more widely used. There is a similar risk of contamination from dirty priming water. In cases where the water is to be delivered under pressure (such as to a village water mains) or to a point higher than the cylinder (such as a water storage tank), a "force" pump is required. The operation is the same, but the design is slightly altered so that the top is airtight. This is done by putting a valve on the spout and adding a "trap tube" and air chamber which maintains the pressure (and therefore the flow) during the up-stroke.

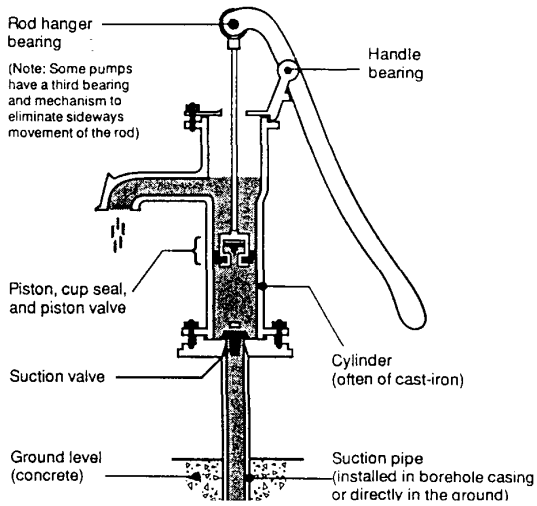

Figure 3: Shallow-well piston pump

Diaphragm

This design is often used for fuel pumps in cars. The Vergnet pump is an adaptation of this principle for deep-well use, which can be used in crooked wells, where a rod-operated pump would have problems, and which is fairly easy to maintain.

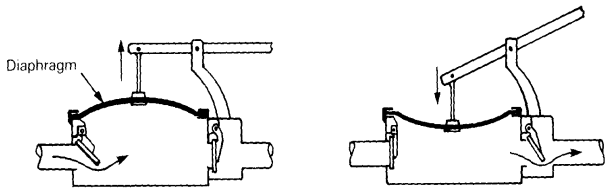

Figure 4: Diaphragm pump

technical brief

Treadle pump
Because leg muscles are stronger than arm muscles, this design is less tiring to use. Most of the parts can be manufactured locally, the exceptions being the cylinders and pulley.

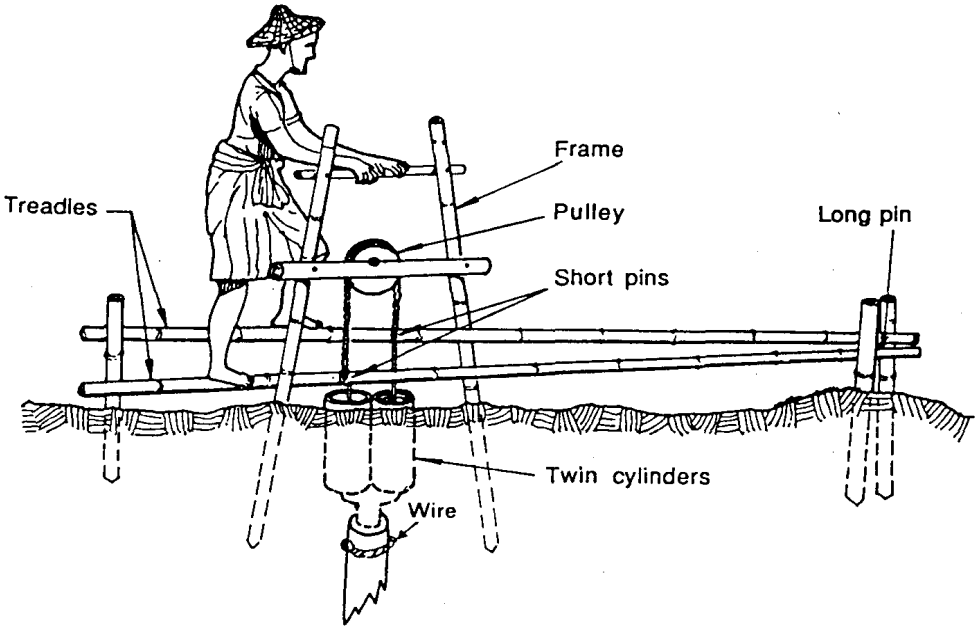

Figure 5: Treadle pump

Deep-well pumps
Deep-well pumps can be used for depths over 7 metres because the cylinder or lifting device is below ground, as shown in Figure 6, often below the groundwater line. They are often known as "lift" pumps because they do not rely on suction to raise the water. As a result of their depth, they are harder to maintain than surface pumps, since the pump-rod must be removed to get at the cylinder. Like suction pumps, lift pumps can be made into force pumps by the addition of a spout valve, air chamber and trap tube. Three types of deep-well pump are described below: piston, helical rotor and direct action.

Piston
The design is very similar to the shallow-well pump and is capable of lifting water from depths of up to 50 metres. However, the cylinder is situated deep underground, below the groundwater-line, connected to the pump handle via a long rod called a "pump rod" (see Figure 6). Sometimes the outside pipe, called the "rising main", is of a larger diameter so that it is possible to pull the whole cylinder up to the surface for repair without taking the pump apart. However, this is more expensive.

Helical rotor (or "progressive cavity")
Helical rotors are capable of lifting water from depths of up to 100 metres. Instead of a piston, there is a metal "rotor" which has a corkscrew shape and which turns inside a rubber "stator" or sleeve (see Figure 6). The lever is replaced with one or two turning handles.

Direct action (or "direct drive")
This design is capable of lifting from a depth of 12 metres. The narrow pump rod is replaced by a hollow plastic pipe which displaces water as the pump handle is pushed down. During the up-stroke, the pipe acts as a pump rod, the valve on the piston
closes and water is lifted up. The pump is therefore capable of pushing water up the rising main during both strokes. Because the pipe is hollow, it floats, so the handle does not have to be pulled up so hard.

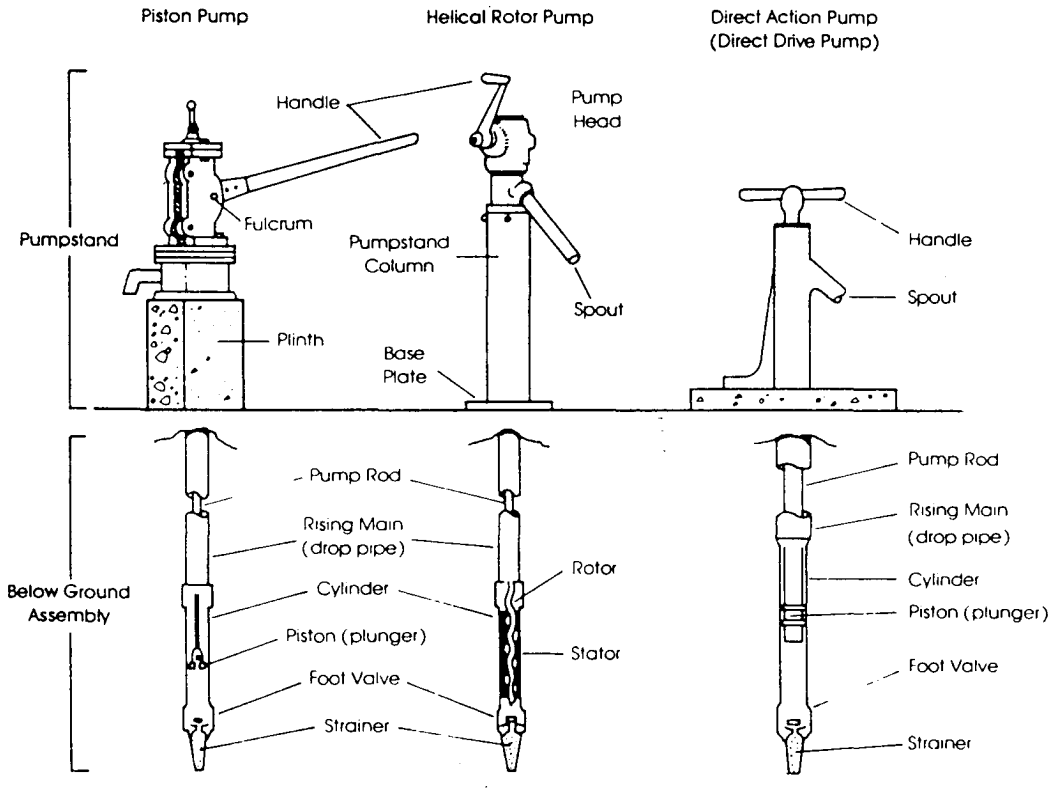

Figure 6:Types of deep-well lift pumps - piston, helical rotor and direct action

Surface Water
Surface water lifters are generally less complicated than groundwater lifters, because the water is so much more accessible. Four types are described below: shadouf, dhone, chain and washer and archimedean screw.

Shadouf (picottah)
The basic shadouf consists of a rope, pole, bucket and counterweight and is capable of lifting water up to 4 metres. The counterweight can be just a heavy rock, but in the more advanced "picottah" design, one person guides the bucket while the other acts as a moving counterweight.

technical brief

Dhone
This design replaces the bucket with a channel. It can also be adapted for picottah-style operation.

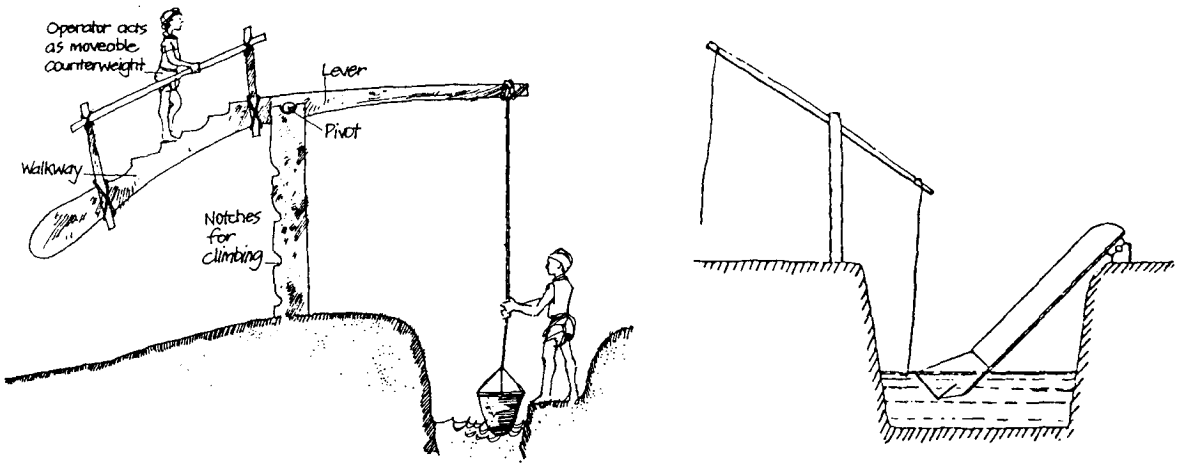

Figure 7: Picottah-style shadouf and dhone

Chain/rope and washer (or "paternoster")
These pumps have been used in China and Europe for many centuries. Water is lifted by close-fitting washers in a pipe. Although in theory it is possible to construct a vertical chain and washer pump to raise water to any height, most do not exceed 20 metres. A variation of this design is called the "dragon-spine" pump, which lies at a shallow angle to the horizontal. In this case, lifting height is rarely more than 6 metres. However, the design is very flexible and can easily be adapted to circumstances.

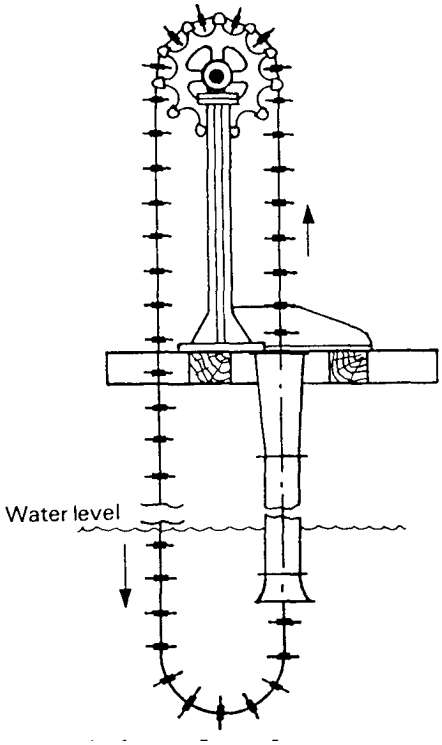

Figure 8: Chain and washer pump

Archimedean screw
Although this design looks quite complicated, it is fairly easy to build using local materials and is readily transportable. The inside, which is shaped like a corkscrew, is turned by a handle, trapping water in the cavities as shown in Figure 9. Although on a much larger scale, this is very similar to the operation of the helical rotor. However, the lifting range is much smaller.

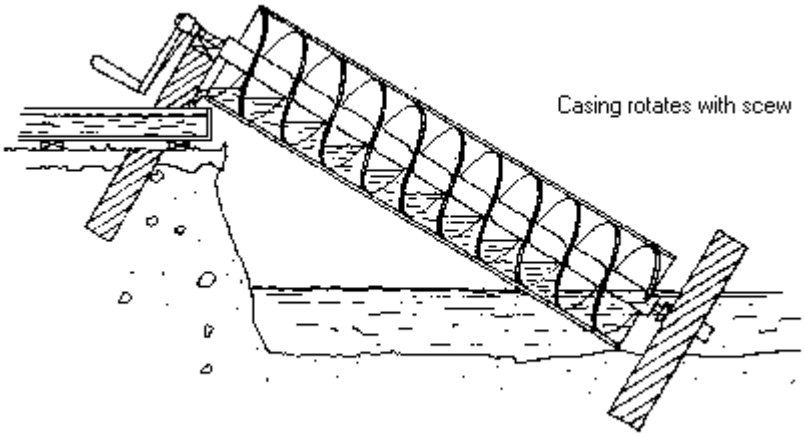

Figure 9:Archimedean screw

Selecting a water-lifter

The choice of water-lifter is determined by the application and the resources available to the users. Demand for water may come from domestic, community, industrial and agricultural needs. It is first necessary to determine:

- where the water will come from (the source)
- where it will go to (the destination)

Figure 10 shows the types of source and destination to be considered.

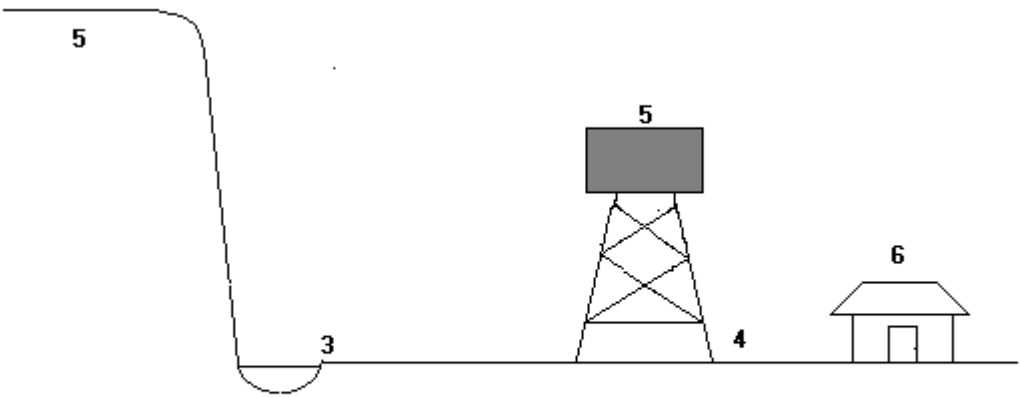

Figure 10: Sources and destinations of water

2 <7 meters

1 >7 meters

Once the source and destination has been determined, it is possible to narrow down the choice of water-lifter. The table below summarises the options available for different combinations of source and destination.

	Source		
Destination	**1. (> 7m)**	**2. (<7m)**	**3. (river/pool)**
4 (Surface)	Deep-well Lift Pump	Shallow well suction pump or open-well	Shallow-well suction pump
5 (hill/tank)	Deep-well lift & Force Pump	Shallow-well force pump	Surface water system or suction & force
6 (village)	Dee-well lift & Force Pump	Shallow-well force pump	Shallow well force pump

Table 1: Water-lifter options

technical brief

Apart from the source and destination of the water, there are many other criteria which should be considered before making a selection. Where possible, the lifter should be suitable for Village Level Operation and Maintenance (VLOM) or Management of Maintenance (VLOMM). This reduces the reliance of the villagers upon large institutions to sustain the development of the water supply. A check-list of things to consider when choosing a pump is shown below.

Capital cost
How much does the lifter cost initially?
Will a loan be needed, or does the village have sufficient funds?

Running cost
What is the on-going cost of operating the lifter?
Does the village have sufficient manpower available to operate the lifter for all the time it is needed?

Maintenance cost
What is the cost of and skill required for the maintenance of the lifter?
Can the pump be repaired in the village or somewhere nearby?
Are spare parts available?
Can the villagers afford them? How often is it likely to need repair?
How long would it take to repair the lifter and what will the villagers do in the meantime?

NB Maintenance is an integral part of lifter management. For more complicated designs, such as the deep-well pumps, it is important that this maintenance is preventative. Problems should be avoided by regular inspection and servicing of the mechanical parts. Wear and tear will be less severe this way, and any problems will be solved before they cause more damage.

Manufacture and materials
Can the lifter be manufactured locally using local skills and materials?

Life expectancy
How long is the lifter expected to last before it has to be replaced?
How resistant is the lifter to abuse?

Lift height and flow rate
How much water does the community need? The maximum flow capacity of the lifter should be matched to the demand from the community, including home, industrial and irrigation needs. (In the case of pumps, this flow rate given by the flow-rate/lift-height, or "Q/h", curve, which should be supplied by the manufacturer)
How high does the lifter have to raise the water?
How deep is the groundwater and is it likely to fall in future (such as from over-use)?

Operators
Is the lifter suitable and acceptable to the people who will actually operate it?
Are there health and safety considerations, such as dangerous machinery or risk of contamination?
Is the operation ergonomic (comfortable to use)? For instance, are the average and maximum handle forces required realistic for women and children?

Community
Is there a capable community organisation which can oversee maintenance and management of the device and the water?
Will the users be instructed how to use and look after the device?

Table 2 below gives a summary of some of these criteria for each of the designs. The values given are very approximate, and should be taken only as a rough guide. As lift height increases, flow rate falls, so at maximum lift, the *actual* flow rate will be much less than the *maximum* flow rate. Also, the flow rates are given for one person operating the pumps, except in the case of the picottah, which requires a minimum of two.

Table 2: Assessment criteria

Type	Construction (Traditional/ Industrial)	Maximum lift height (metres)	Maximum flow rate (m^3/hour)
SUCTION			
Rower	Traditional	7	3
Suction piston	Industrial	7	8
Diaphragm	Industrial	7	10
Treadle	Traditional	7	18
LIFT			
Rope and bucket	Traditional	100	15
Lift piston	Industrial	50	1.5
Helical rotor	Industrial	100	1.5
Direct action	Industrial	15	1
SURFACE WATER			
Shadouf	Traditional	4	6
Picottah	Traditional	8	6
Dhone	Traditional	1.5	6
Chain and washer	Trad / Industrial	15	25
Archimedean screw	Traditional	1.5	25

References and resources

Resources

- *Human and Animal-powered Water-lifting Devices: A state-of-the-art survey* by W. K. Kennedy & T. A. Rolgers. ITDG Publishing, 1985.
- *Water pumping devices - A handbook for users and choosers* by Peter Fraenkel, ITDG Publishing, 1986.
- *Tools for Agriculture - a buyer's guide to appropriate equipment* Introduction by Iab Carruthers & Marc Rodriguez, ITDG Publishing, 1992.
- *How To Make and Use The Treadle Irrigation Pump* by Carl Bielenberg and Hugh Allen, ITDG Publishing, 1995.
- *How to Make a Rope-and-Washer Pump* by Robert Lambert, ITDG Publishing, 1990.
- *The Treadle Pump: Manual Irrigation for Small Farmers in Bangladesh* by Alastair Orr, A. S. M. Nazrul Islam, & Gunner Barnes, Rangpur Dinajpur Rural Service - RDRS

ITDG Publishing
Tel: +44 (0)1926 634501
E-mail: orders@itpubs.org.uk
Website: http://www.developmentbkookshop.com

Organisations

WELL
London School of Hygiene & Tropical Medicine
Keppel Street, London, WC1E 7HT, United Kingdom
Tel: +44(0)20 7927 2214
Fax: +44(0)20 7636 7843
E-mail: well@lshtm.ac.uk
Website: http://www.lboro.ac.uk/well/
WELL is a resource centre which aims to promote environmental health and well being in developing and transitional countries. It is managed by the London School of Hygiene and Tropical Medicine (LSHTM) and the Water, Engineering and Development Centre (WEDC), Loughborough University for British & Southern NGOs working in water & sanitation.

WaterAid
Prince Consort House, 27-29 Albert Embankment, London, SE1 7UB, United Kingdom
Tel: +44 (0)20 7793 4500
Fax: +44 (0)20 7793 4545
E-mail: technicalenquiryservice@wateraid.org.uk
Website: http://www.wateraid.org.uk

The World Health Organization
Headquarters Office in Geneva (HQ)
Avenue Appia 20
1211 Geneva 27
Switzerland
Tel: +41 22 791 21 11
Fax: +41 22 791 3111
Website: http://www.who.int

Manufacturers
This is a selective list of suppliers and does not imply endorsement by Practical Action. There is a very large number of manufacturers in India; more can be found in the book "Tools for Agriculture" (see below).

Steelman Indisutries
Shanti Dham, Kankarbagh Main Road, Patna (Bihar) - 800 020, India
Tel: +91-612-352530
Fax: +91-612-352872
E-mail: manraw@hotmail.com
Website: http://www.geocities.com/Eureka/park/4967/
Produce the following handpumps: India Mark II, India Mark III, India Mark IV, Rawman shallow & force handpump, Rawman special Lift & force VLOM handpump

Ajay Industrial Corporation
4561 Deputy Ganj, Sadar Bazar, Delhi-110006, India
Tel: +91 11 3545291/ 3611140/ 3612204/ 3612206/ 3616816
Fax: +91 11 3536205
E-mail: ppp@del3.vsnl.net.in
Website: http://www.ajayindcorp.com/
Manufacture a wide variety of handpumps including: India Mark II, India Mark III, Afridev, Treadle pump.

Manufacturers

Van Reekum Materials bv
P. O. Box 98, 7300 AB Apeldoorn, Netherlands
Tel: +31 55 533 54 66
Fax: +31 55 533 54 88
E-mail: info@reekum.nl
Website: www.reekum.nl
Producers of a range of pumping equipment

Mono Pumps Limited
Martin Street, Audenshaw, Manchester M34 5DQ, England, United Kingdom
Tel: +44 (0)161 339 9000
Fax: +44 (0)161 344 0727
E-mail:info@mono-pumps.com
Website: http://www,mono.pumps.com
Producers of helical rotor and piston lift device

Monoflo Incorporated
16503 Park Row, Houston, Texas 77084, U.S.A.
Tel: +1 281 599 4700
Fax: +1 281 599 4733
E-mail: inquire@monoflo.com

SWS Filtration Ltd.
The Bakers Chest, Hartburn, Morpeth, Northumberland NE61 4JB, United Kingdom
Tel +44 (0)1670 772214
Fax +44 (0)1670 772363
E-mail: swsfilt@dial.pipex.com
Manufactures of Rower and other low-technology pumps

H.J.Godwin Ltd.
Quenington, Cirencester, Glos, GL7 5BX, United Kingdom
Tel +44 (0)1285 750271
Fax +44 (0)1285 750352
Deep-well and shallow-well pumps

Prodorite (Pvt) Ltd
21 Leyland Road, Arbennie Industrial Sites, PO Box 2887, Harare, Zimbabwe
Tel: +263 4 663691/4
Fax: +263 4 663696
Products include hand pumps for wells, water storage tanks, Blair vent pipes and sanitary pans

Consallen Group of Companies, P.O. Box 2993, Sundury, Suffolk, CO10 0TY, United Kingdom
Tel/Fax: +44 (0)1787 881115
E-mail: dvallen@compuserve.com
Website: http://ourworld.compuserve.com/homepages/dvallen/
Specialists in Rural Water Supply & VLOM Handpumps